PERFORATING TECHNOLOGY

THE HOLE STORY

NAPMA

North American Punch Manufacturers Association

PERFORATING TECHNOLOGY

THE HOLE STORY

FOREWORD

To demonstrate the advantages of using standard perforating components and to provide a basis for selection of the appropriate standard, this manual has been prepared by the North American Punch Manufacturers Association.

It compares the physical and functional characteristics of the various standards plus suggested application areas for each, explains the perforating process and defines the functional requirements of each component.

The manual is for use by all individuals concerned with the production of quality stampings at reduced costs. It may also be used in industrial training programs and technical schools.

CONTENTS

INTRODUCTION

THE NEED FOR STANDARDS

Perforating punches and die buttons are perishable tools subject to periodic replacement.

Prior to standardization, most perforating components were made by the die maker using ordinary tool room machines and methods. When failure occurred, the lack of dimensional uniformity made replacement difficult, time consuming and expensive.

The perforating punch is the most fragile part of the die assembly; the component most likely to fail resulting in a loss of production, time and money. The need for interchangeability and improvement in structural soundness has long been recognized.

THE PUNCH MANUFACTURER

The stamping industry is comprised of three separate but supporting areas of specialization: the stamper, the die builder and the tooling component manufacturer. Included in the latter group are punch manufacturers who are specialists in the efficient production of structurally reliable, dimensionally accurate finished products.

As larger quantities of interchangeable stamped parts were required, attention was directed to extending the productive life of each die assembly. Punch manufacturers were soon offering punch guide bushings, die buttons and retainers to satisfy this new technology. The addition of these related components simplified the work of the die designers and die builders.

Early catalogs showed wide variations in sizes, types, hardness and tolerances. Component interchangeability was assured by limiting purchases to a single source.

Despite the lack of interchangeability between the various individual standards, they permitted utilization of mass production echniques resulting in quality components economically priced. As more and more stampers recognized the economic benefits of using commercial components, the problem of multi-source interchangeability became acute.

OBJECTIVE OF THE NAPMA

Although extremely competitive and self-reliant, each punch manufacturer recognized the need for coordinated action to accomplish multisource component interchangeability.

In the beginning, the manufacturers functioned in an advisory capacity to a number of small standards committees. Widely separated, these committees were not representative of the user and manufacturing groups and their activities were not coordinated. Realizing that interchangeability standards could not be accomplished in such a neutral atmosphere, the manufacturers organized the NAPMA.

The NAPMA and its member companies are dedicated to four fundamental objectives:

1. To standardize component elements and configurations that are repetitiously required.
2. To establish physical interchangeability of standard components regardless of the manufacturing source.
3. To produce components in accordance with the established standards.
4. To promote the use of standard components by stampers and die builders.

ACCOMPLISHMENTS OF THE NAPMA

The NAPMA cooperated with representatives of the user group to develop industry-wide standards for component interchangeability. These standards have passed the consensus requirements of the American National Standards Institute (ANSI). Also, in the early 1980's, the NAPMA began developing a series of Metric Standards or Head Type and Ball-Lock Punches and Die Buttons. The NAPMA has worked closely with ANSI and international standards agencies to insure interchangeability in metric applications.

The practical nature of these standards is substantiated by the fact that virtually all non-member punch manufacturers are now producing components which satisfy the specifications.

AMERICAN NATIONAL STANDARDS

STANDARD	TITLE
B94.14-1968 (R1 987)	Punches-Basic Head Type
NAPMA-0116-01	Punches-Basic Head Type (Metric)
B94.16-1987	Retainers-Ball-Lock, Punch and Die Button, Light and Heavy Duty
B94.56-1995	Gages-Functional, Ball-Lock Punches (Inch)
B94.56.1 m-1995	Gages-Functional, Ball-Lock Punches (Metric)
NAPMA-9912-99	Punches-Ball-Lock Light and Heavy Duty
NAPMA-9726-97	Punches-Ball-Lock Light and Heavy Duty (Metric)
B94.22-1968 (R1987)	Punches Variable, Head Type
B94.22.1-1977 (R1989)	Punches Variable, Head Type (Metric)
B94.23-1969 (R1987)	Punch Guide Bushings-Variable Press Fit
B94.27-1970 (R1987)	Die Buttons-Basic Taper Relief, Press Fit
B94.27.1m-1983 (R1988)	Die Buttons-Basic Taper Relief, Press Fit (Metric)
NAPMA-0002-00	Die Buttons - Basic Straight Relief, Press Fit
NAPMA-9917-00	Die Buttons- Straight Relief, Press Fit (Metric)
B94.29-1970 (R1988)	Die Buttons-Ball-Lock
B94.29.1-1977 (R1989)	Die Buttons-Ball-Lock (Metric)
B94.30-1970 (R1988)	Die Buttons-Variable Press Fit
B94.38-1972 (R1987)	Variable, Angle Head Type and Related Quill Bushings
B94.40-1972 (R1987)	Punches-Wire Type
B94.41-1972 (R1987)	Punches-Angle Head Type and Related Quill Bushings
B94.44-1972 (R1987)	Punches-Cylindrical Head Type and Related Quill Bushings

They are available at nominal cost from the American National Standards Institute, 11 West 42nd Street, 13th Floor, New York, N.Y., 10036 or from the American Society of Mechanical Engineers, Three Park Avenue, New York, N.Y. 10016

BENEFITS OF STANDARDIZATION

Standard perforating components cost less to buy, cost less to use, reduce inventory requirements, provide multisource interchangeability and normally perform better than those made in-house.

LOWER PROCUREMENT COSTS

A standard punch or die button can be purchased for a fraction of its in-house manufacturing cost.

The punch illustrated can be purchased from a number of suppliers for approximately $9.00, a savings of $34.25 when compared to conservatively estimated in-house costs.

Similar savings can be realized when standard die buttons are purchased rather than made. Standard components provide the economies of mass production with the inherent benefits of supplier competition.

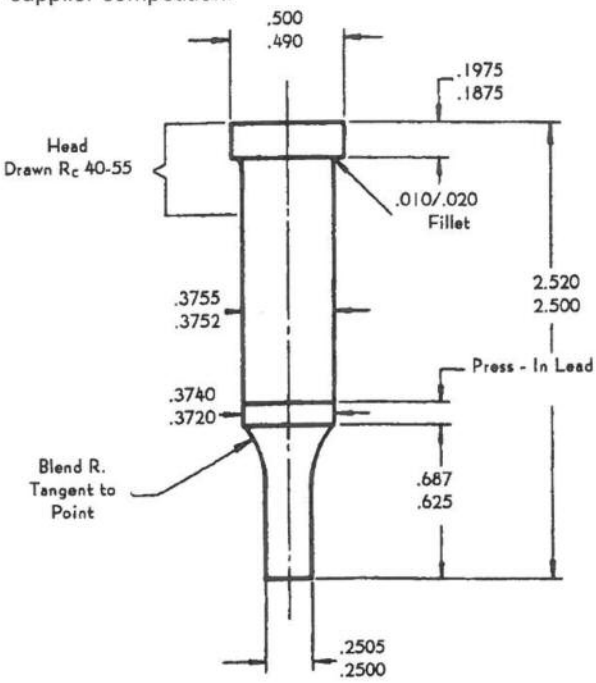

Point Concentric to Shank
Within .0005 T.I.R. Max.

Point and Shank R_c 60-63

IN PLANT MANUFACTURE ASSUMED RATE: $40.00 PER HOUR		
Operation	**Hrs.**	**Amt.**
Obtain Tool Steel Rod	.05	2.00
Cut to Length	.05	2.00
Locate and Drill Centers	.05	2.00
Turn to Required Configuration	.15	6.00
Material & Heat Treat Allowance	—	1.25
Check Hardness Values	.05	2.00
Grind Complete	.40	16.00
Cut-Off Point Center Hole	.05	2.00
Inspect Complete	.05	2.00
Travel Time Between Operations	.20	8.00
	Total	43.25

REDUCED INVENTORY REQUIREMENTS

The consistent size control of NAPMA standards relating to nominally-sized retention holes assures repetitious interchangeability of replacement items and minimizes the number of inventory variations.

Items produced in-house are generally inconsistent dimensionally and retention holes are sized to suit a particular component. This practice results in interchangeability difficulties, a proliferation of retention dimensions and a massive increase in inventory requirements.

NAPMA SPECIFICATION

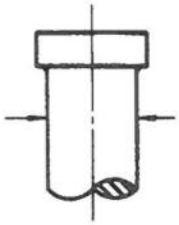

Consistent size control to provide light press-fit in nominally-sized holes. Assures interchangeability of replacement components.
Retainer holes may be bored in advance.
Extra stock provided at head end for flush grinding at assembly.

TYPICAL IN-PLANT PROCEDURE

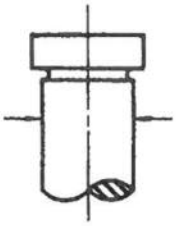

Diameters not consistent. retainer holes sized to suit a particular component.
Production of retainer plate delayed until component has been finished.
Interchangeability difficulties lead to excessive inventory build-up.

MULTI-SOURCE AVAILABILITY

Standard perforating components are cataloged and prepriced by many punch-manufacturers. Fast, dependable service can be provided by virtue of substantial inventories and efficient, specialized finishing techniques.

Components purchased from suppliers who have adopted the industry-wide standards are physically interchangeable.

Special requirements are also quickly satisfied because practically any shape can be produced on a standard punch or in a standard die button.

WIDE RANGE APPLICABILITY

The various standards provide the styles, types and precision levels that satisfy 80% of all application requirements or individual preferences. Standard components are available for the most widely used retention systems of Press Fit and Ball-Lock.

The Basic Series is intended for applications where the punch point is self-supporting and the punch-to-die clearance is .001 per side or greater.

The finer precision level provided in the Variable Series is required where the punch-to-die clearance is .0005" minimum per side.

Two selection guides-one for Punches and another for Die Buttons-illustrate the extensive varieties available, their physical differences and the generally recommended application areas.

To utilize any standard perforating component, it is only necessary to accept the retention dimensions-shank or body diameter-and, where applicable, the head sizes.

Standards data provides complete component definition including configuration, dimensional limits and hardness specifications. The die designer need only select the required components from the appropriate standard. The selection process provides additional cost reduction benefits when compared with the usual time-consuming design procedure.

PERFORMANCE CHARACTERISTICS

Industry-wide standards are not predicated on physical interchange-ability alone. The need for structural soundness and the ability of each component to satisfy its functional requirements have also been considered. As a result, standard components are strong, exhibit good load distribution characteristics and are highly fatigue-resistant.

Standard hardness specifications are intended to fully develop the desirable mechanical properties of popular tool steels. Reducing the hardness of the head and adjacent shank area improves the shock-resistance of a standard punch.

Structural soundness is greatly affected by construction details. The standards specify a fillet under the head and a generous blend radius to reduce stress concentration in critical areas resulting in greater load-handling characteristics with improved durability, The illustrations compare NAPMA construction details with those of typical in-house structures.

Tool steel selection is a function of application requirements and individual preference. The standards do not specify tool steel alloys. Within the competitive spectrum, however, most popular tooling materials are available from more than one source.

FUNCTIONAL REQUIREMENTS

The perforating process subjects the components to compressive tensile, frictional and deflecting forces. Functional criteria, therefore, are dictated by the process and the magnitudes of the developed loads.

THE PERFORATING PROCESS

The process requires two actions, perforating and stripping. Each action generates different loading conditions which must be successfully opposed for optimum component performance.

Under impact, a punch is forced through the workpiece resulting in the separation of a slug which passes through the mating die cavity. The load is applied at every point on the periphery of the punch and the die cavity. Cracks are initiated and extended in the workpiece from these points until slug separation is complete. As a result, the workpiece hole conforms to the size and shape of the punch point. Similarly, the slug conforms to the die cavity.

After the hole and slug have been produced, the direction of punch travel is reversed so that it may be withdrawn from the workpiece. A stripping mechanism is usually employed to restrain the workpiece to perform punch withdrawal.

Because of the nature of the applied loads, breakage usually occurs during perforating and most of the cutting edge wear develops during stripping.

NAPMA Configuration

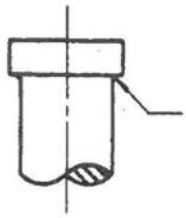

GROUND FILLET
a) Underside of head ground square with shank
b) Improves structural strength of juncture

Typical In-Plant Structure

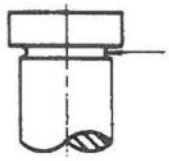

RELIEF UNDERCUT
a) Underside of head unground
b) Reduces shank cross-section

NAPMA Construction

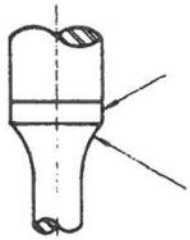

PRESS-IN LEAD
Simplifies assembly in retainer plate

BLEND RADIUS
Ground tangent to point for improved load dispersion and reduced load concentration

Typical In-Plant Structure

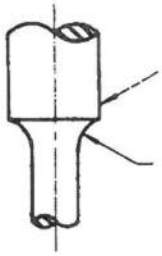

Press-in lead often omitted

SMALL RADIUS (often unground)
Poor load-dispersion characteristics. Tool marks may result in premature failure.

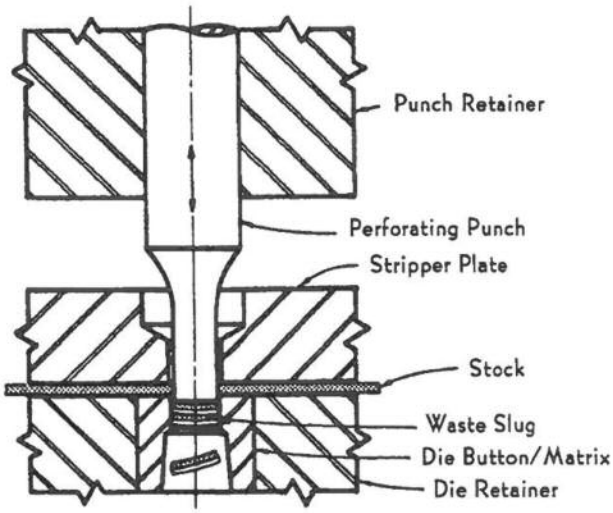

THE PERFORATING PROCESS

PERFORATING LOADS

To calculate the load required to perforate a hole when using a flat-faced punch and die button, the following formula is generally used:

$P = LtS$, where

P = Load (lbs.)
L = Perimeter of hole (inches)
T = Workpiece thickness (inches)
S = Ultimate shear strength of the workpiece (psi)

Punch-to-die clearance values, staggered punch lengths or angular punch faces do not affect the magnitude of the load requirement.

Clearance value variations affect only the amount of work being done or the energy required to perform the operation. Large clearance allowances tend to reduce the energy requirement and small values tend to increase it.

Staggered punch lengths or angular punch faces are used to distribute the load over a greater distance of punch travel. The load requirement is reduced at each increment of penetration but the magnitude of the total load is unchanged.

Angular punch faces tend to deflect the perforator in a horizontal direction and usually result in broken or bent components. When the press capacity is such that the load must be applied at different levels of pene-tration, staggered punch lengths are preferable because lateral deflection is minimized.

DISTRIBUTION OF PERFORATING LOADS

All materials will deform when subjected to externally applied loads. Within the elastic limit of a given material, the deformation is directly pro- portional to the applied load and the component will return to its original shape and size as the load is removed. When the elastic limit has been exceeded, the component will be permanently deformed.

Deformation, whether permanent or temporary, is the result of tensile, compressive, bending, torsional or shearing stresses induced in the material by the applied load. It is imperative, therefore, to exercise some degree of control over the stress levels developed relative to the ultimate strength of the component material.

Stress is the force per unit area and may be calculated by means of the formula: $S=P \div A$, where

S = Applied Stress (psi)
P = Punching load (lbs.)
A = Contact Areas (sq. inches)

Durability of a perforator, for example, is dependent upon the induced stress levels relative to the ultimate strength of the component material.

Since most perforating components are made of tool steel having an ultimate tensile strength of 300,000 psi, only the contact area can be controlled to improve durability.

Cutting edge chipping, for instance, can be reduced or eliminated by stoning a .002" to .004" radius or chamfer on the component. This procedure effectively increases the contact area resulting in lower stress value.

Head breakage is not an uncommon problem. By increasing the shank diameter, the load is distributed over a large area and the stress value is correspondingly reduced. In most cases, this is sufficient to eliminate the failure.

Bending or buckling problems develop because the magnitude of deflection increases with component length. Long, unsupported punch points are subject to excessive deflection which results in premature failure. Shorter point lengths or the utilization of punch guide bushings improve component rigidity and prolong the useful life.

The need for hardened backing plates can be determined by applying the formula. When the calculated stress value exceeds 20,000 psi, the component will sink into all-steel or semi-steel die set plates unless a backing plate is provided.

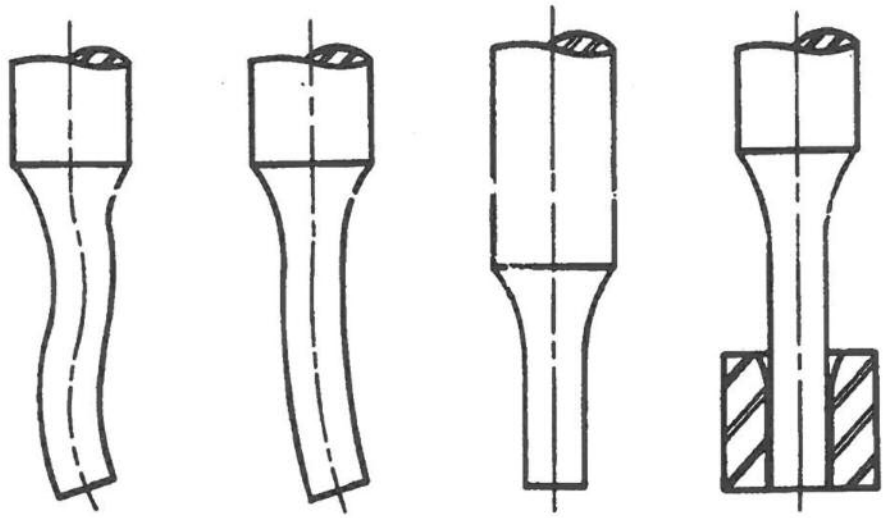

Buckle | Bend | Short Point | Supported Point

STRIPPING LOADS AND THEIR EFFECT

During the stripping cycle, the workpiece hole edges scrub away at the cutting edge of the punch as illustrated. When the cutting edge becomes sufficiently dull, the quality of the stamped part is impaired making it necessary to resharpen the punch.

The frictional force developed is essentially equal to the stripping load and is directly related to the rate at which the component cutting edges erode. The factors that affect the magnitude of the frictional force and consequently, the wear rate are expressed in the formula:

F = uN where

F = Force of Friction (lbs.)

u = Coefficient of Friction

N = Normal Force (lbs.)

Because specific values for these factors are difficult to determine, it is impractical to attempt the calculation of stripping loads. Arbitrary values ranging from 10% to 35% of the calculated punching load are usually assigned to establish the stripping requirement. Should the allowance prove inadequate when the die assembly is put into service, additional springs are installed.

Although the formula is difficult to apply in a direct calculation, it can be used to effect frictional force reductions which decrease the wear rate of component edges. The objective is to reduce the value of the ",u" and "N" factors so that more stampings can be produced between component sharpenings.

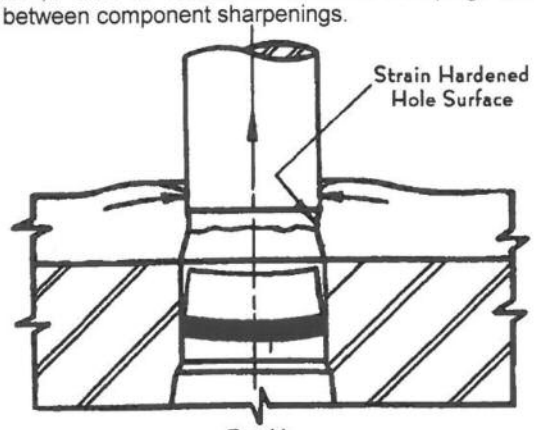

Stripping Forces

COEFFICIENT OF FRICTION (u)

When one member in a force system slides relative to another, the coefficient of friction decreases as the hardness difference between the members increases. Treatments which increase the surface hardness of the punch, therefore, can be utilized to reduce the force of friction. Nitriding, cyaniding and hard-chrome plating are examples of available processes.

Introducing a lubricant barrier to prevent contact between the members further reduces the coefficient value. In most perforating applications, the interference fit between the punch and the workpiece hole does not pro-vide room for a physical barrier. Ordinary lubricant films rupture and permit metal-to-metal contact, a condition which accelerates the wear rate. Lubricants which contain extreme pressure additives form a chemical barrier between the sliding members and reduce the coefficient of friction. To assure proper selection and optimum performances, a lubricant specialist should be consulted.

Incorrect sharpening practices can soften component cutting edges and reduce the hardness difference relative to the workpiece hole. Tool steel alloys without red hardness characteristics will draw back when subjected to temperatures of 400°F or greater. Coolants, stock removal rates, wheel selection and frequency of dressing have a substantial effect on grinding temperatures and the resultant hardness of the component. Proper sharpening practices should be established and observed in order to preserve the hardness differential.

NORMAL FORCE (N)

Any tendency of the workpiece hole to become smaller than the punch which produced it indicates that an interference fit was developed during the perforating cycle. The force which results is known as the normal force because its line of action is perpendicular to the direction of the punch travel. Whenever the loading conditions are such that the workpiece material is laterally displaced about the periphery of the punch, the resulting hole will become smaller as the punch is withdrawn. Among the application variables which affect the amount of interference and the magnitude of the normal force are:

Punch-to-die clearance allowances;

Ratio of hole size to workpiece thickness:

Proximity of the hole to an adjacent part edge:

Spacing between adjacent holes;

Type of stripping device utilized;

Cutting edge condition of the perforating components.

PUNCH-TO-DIE CLEARANCE ALLOWANCES

In most perforating applications. the die cavity is somewhat larger than its mating punch. The dimensional difference is known as clearance and to avoid confusion. must be identified as "per side" or "total".

The forces at every point on the periphery of the punch are essentially

equal, parallel and opposite to the reaction forces developed around the die cavity. This unique system of forces causes a torque action on the workpiece material that is confined between them. As the perpendicular distance between opposing forces (clearance per side) is increased, the torque becomes greater.

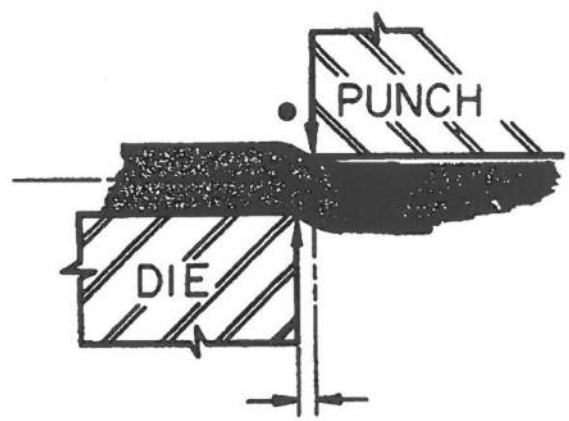

Effect of Clearance on Torque

When the torque developed is small, the surface of the workpiece material will be displaced laterally and vertically by the punch. The later-al displacement induces compressive stresses within the workpiece surface. As the punch is withdrawn during stripping, the hole tends to close as the internal stresses are relieved. By developing sufficient torque, the workpiece surface will be stressed in tension and, when slug separation is complete, the hole will become larger as the stresses are relieved. Within the perforating process, the type of stress induced in the workpiece surface is a function of the clearance allowance.

In ferrous materials, for example, a total clearance allowance equal to 10% of the workpiece thickness usually results in producing a hole that is.0005" smaller in diameter than the punch. By increasing the total clearance to 25% of the workpiece thickness, the punched hole will usually be equal to or .0005" larger than the punch. As the amount of interference is reduced, the force of friction is decreased and the working life of the punch is extended.

Clearance allowances must be predicated on the functional requirements of the workpiece hole. Small allowances result in minimum roll-over, long burnished lands, and slight angular breaks in the punched holes. Punch wear is accelerated and slug- jamming problems may develop.

Larger clearances produce more roll-over, shorter burnished lands and an increase in the break or fracture angle. The punch wear rate is reduced but there is a tendency for the slugs to be lifted out of the die cavity. When utilizing larger clearance allowances, slug-ejector punches should be used to prevent slug-pulling.

RATIO OF HOLE SIZE TO WORKPIECE THICKNESS

For a given material and clearance allowance, two punched holes of different sizes will exhibit different edge characteristics. The small hole will have a longer burnished land and very likely, a larger burr. Similarly. the smaller punch will have a duller cutting edge. It is readily apparent that the small punch was subjected to a greater frictional force despite the fact that the workpiece and clearance allowance were the same for both punches. Obviously, the ratio of hole size to workpiece thickness must have some effect on "u" and "N".

When the required hole size is less than 1.5 times the workpiece thickness, the slug is extremely rigid. It will not readily deform and as a result, the workpiece surface must be displaced laterally to make room for the punch during its initial penetration. Thus, a relatively large interference

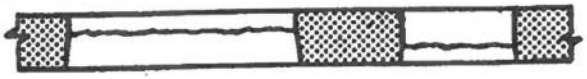

Large Hole Small Hole

Effect of Hole Size on Edge Characteristics

fit is developed. Continued punch penetration strain-hardens the workpiece in very long and shallow zones which decreases the hardness differential and increases the coefficient of friction.

Just as heat improves the ductility of ferrous materials, increased torque values will facilitate slug displacement to reduce the amount of interference and to effect more rapid fracture. This can only be accomplished by using larger than usual clearance allowances for this range of ratio.

PROXIMITY OF THE HOLE TO AN ADJACENT PORT EDGE

Slots or holes punched close to the part edge tend to displace the narrow web in an outward direction. This bulging action indicates that there is insufficient mass to dissipate the compressive stresses induced in the workpiece surface by the punch. Further, the web displacement results in reducing the normal force. Although the decrease in frictional force is desirable, the distorted part edge is objectionable. By increasing the clearance allowance until the workpiece surface is stressed in tension, edge distortion may be eliminated and the magnitude of the normal force minimized.

Three points on the periphery of a blanked hole are usually very close to the workpiece edges. The narrow webs are relatively easy to displace and tend to reduce the normal force. during stripping. Conversely, the large mass which surrounds a small hole punched in the center of the workpiece resists deformation and makes stripping more difficult. In the latter case, an increased clearance allowance will help to reduce the normal force.

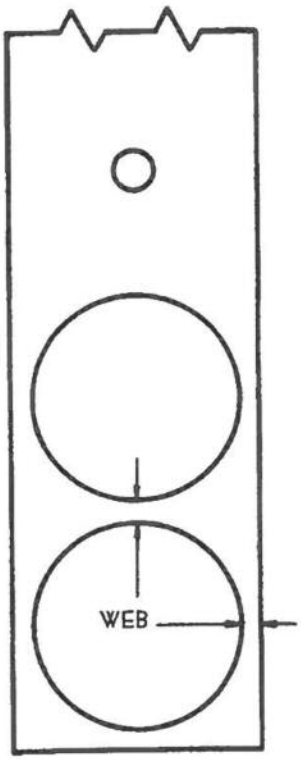

SPACING BETWEEN ADJACENT HOLES

When a large number of holes are punched in a closely spaced pattern the centermost holes are more difficult to strip. The lateral thrust developed at every point of the cutting periphery of each punch tends to concentrate on the centrally-located holes and increases the normal forces in that area.

To reduce the effect of this concentration of forces, the centermost punches should be shorter than the others by an amount equal to one-half of the workpiece thickness. This procedure will permit the surface stresses to be partially dissipated within the mass of the workpiece prior to contact by the shorter punches.

TYPE OF STRIPPING DEVICE UTILIZED

Fixed or channel-type strippers must provide clearance between the plate face and top surface of the workpiece to prevent interference during the feeding cycle. As a result, the workpiece tends to rise with the punches or the clearance distance. During this interval, the surfaces of the workpiece are free to flex, bend or twist resulting in a binding action between the workpiece and the punches. As a result, the breakdown of the cutting edges is non-uniform and rapid.

When pressure is applied to the workpiece in such a manner that it remains flat and cannot move with the punches, the binding action will not occur. Among the devices which positively control the stock are spring-loaded stripper plates, urethane strippers and rubber stripping units.

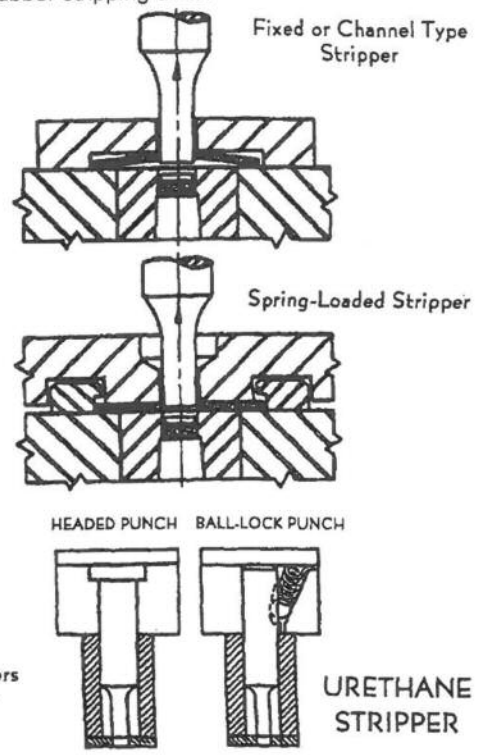

CUTTING EDGE CONDITION OF THE PERFORATING COMPONENTS

Sharp cutting edges apply such large stress values to the workpiece that slug separation occurs with a minimum of plastic deformation and punched hole close-in. As the cutting edges become dull, the hole surfaces are strain-hardened to a greater degree resulting in an increase of both the normal force and the coefficient of friction.

It is recommended that the sharpening frequency be based on a maximum stock removal of .010" for punches and .005" for die buttons.

PUNCH-TO-DIE ALIGNMENT

Alignment is an expression of the degree of clearance uniformity between corresponding points on the cutting periphery of the punch and the die button. The better the alignment, the more uniform the stampings are the greater the quantity that can be produced by a given die assembly. Non-uniform clearances subject the punch to unbalanced loads and the resulting deflection causes premature component failure.

Aligning a punch and a die button when each can be individually positioned permits the die builder to compensate for factors which may otherwise contribute to misalignment. Such is not the case when each retainer plate contains more than one perforating component. As one component is repositioned, all of the other components in the retainer plate are correspondingly shifted. Under these circumstances, the alignment procedure is one of compromise.

To assure a reasonable degree of alignment during the assembly phase of die construction, special attention must be given to the following listed factors:

Component concentricity limits;
Effect of shape deviations on clearance uniformity;
Axial relationships in multi-hole retainer plates;
Effect of the retention system on axial relationships;
Total effect of the combined factors.

COMPONENT CONCENTRICITY LIMITS

The shank of the punch and the body of the die button establish the relative positions of these components when assembled in their respective retainer plates. Any significant eccentricity of the punch point to its shank or the die hole to its body will contribute to a non-uniform clearance condition. Depending upon the direction and amount of the individual offsets, the misalignment increments could be self-cancelling or accumulative.

Eccentricity limits for these component elements are specified in the ANSI and NAPMA standards. Concentricity limits range from .0003" to.0010" maximum T.I.R. depending upon the hole shape to be punched and the precision level upon which the individual standard is based.

To provide assurance that the die assembly will function properly, selection of an appropriate component standard should be predicated on the clearance requirements for each application.

EFFECT OF SHAPE DEVIATIONS ON CLEARANCE UNIFORMITY

Punch point or die hole shape deviations can cause the clearance per side to range from uniform to non-uniform values. Component loading, therefore, can vary from a balanced condition to an unbalanced one which produces deflection.

Because permissible shape deviations are not usually specified, it is implied that they lie within the dimensional limits of the selected punch point or die hole. Point-to-point clearance variations, therefore, are a function of the size tolerance and the orientation of the mating components at assembly.

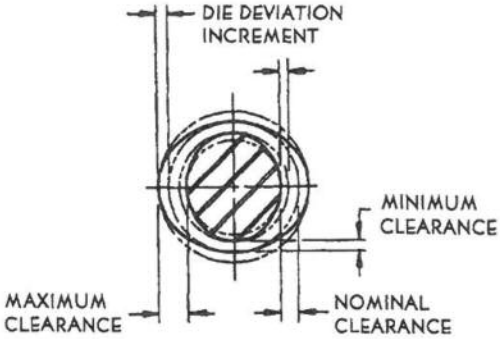

SHAPE DEVIATION EFFECT ON CLEARANCE UNIFORMITY

Applying this concept to a round punch point or die hole, it is apparent that the actual shape may range from a perfect circle to an ellipse, and still lie within the dimensional limits. Relative to an ellipse, the minor axis cannot be smaller than the low limit dimension and the major axis cannot exceed the high limit. In effect, the maximum permissible difference between the two axes is equal to the total tolerance. The point-to-point clearance variation contributed by each component will not be greater than one half of its total size tolerance. The effect of shape deviations and component orientation on clearance uniformity is indicated in the adjacent illustration.

Size tolerances range from +.0002"/-.0000" to +.0010"/-.0000" depending upon the shape, component type and precision level in the selected standard.

AXIAL RELATIONSHIPS IN MULTI-HOLE RETAINER PLATES

Dimensional control of the spacing between adjacent retention holes is dependent upon the method of production utilized. Jig-boring or jig-grinding equipment, for example, can maintain the specified dimen-sion to ±.0001" tolerance.

To illustrate the effect on alignment of this extremely small tolerance, the punch retainer hole spacing is shown at the high limit and that of the die retainer at the low limit. The total axial displacement is .0002" and align-ment becomes a compromise value. By shifting one retainer plate relative to the other, the misalignment factor is made uniform about both sets of axes.

Whenever multi-hole retainer plates are required, it is imperative that center distances be closely-controlled to minimize axial displacements, which have substantial effect on the ultimate alignment of the mating components.

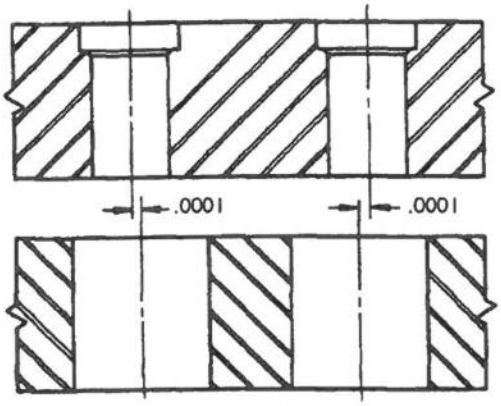

MULTI-HOLE RETAINER PLATES

EFFECT OF THE RETENTION SYSTEM ON AXIAL RELATIONSHIP

The axial alignment of the punch or die button to its retainer hole is affected by the type of retention system employed. In a press-fit assembly, the light interference fit develops uniform pressure completely around the component and the centerlines coincide as illustrated.

The ball-lock system of retention utilizes the slip-fit concept in conjunction with a spring loaded ball. Spring pressure forces the component against the opposite side of the hole and maximum axial displacement occurs. The offset is definitely predictable and can be compensated for in either standard or multi-hole retainer assemblies.

A standard ball-lock retainer contains a single component. Alignment is readily accomplished by shifting one component assembly relative to its mating component assembly.

A multi-hole ball-lock retainer is usually made so that the spring loaded balls produce axial displacements in only one direction and compensating displacements are provided in the mating retainer.

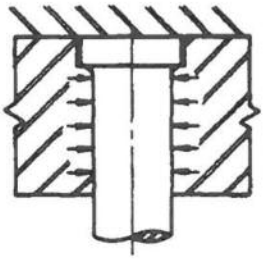

PRESS-FIT ASSEMBLY

TOTAL EFFECT OF THE COMBINED FACTORS

Each of the foregoing factors contributes a misalignment increment that lies somewhere between zero and a maximum value. As the mating components are assembled, the factors combine and some increments may cancel out while others may become additive. Under the most adverse conditions of dimensional and axial relationships, the maximum eccentricity will be equal to the sum of the maximum misalignment increments per side. Conversely, when the conditions are ideal, the minimum accumulation of misalignment increments will total zero. Neither of these conditions is likely to occur and the normal accumulation or total eccentricity will probably be midway between these extremes.

Each of the factors have been charted along with its maximum misalignment increment per side for the various individual standards, workpiece hole shapes and retention systems. The individual values have been accumulated to show the most adverse misalignment condition and to indicate the eccentricity which may be normally anticipated.

To prevent broken component cutting edges, the minimum value for the clearance per side should be at least .0002" greater than the normal accumulation of eccentricity increments. Because the clearance value must be established to satisfy workpiece requirements, it can be used to select the appropriate component standard relative to the desired retention system.

The Variable Series of standards, for example, may be used where the clearance per side is .0005" or greater. When smaller clearance values are required, it may be necessary to lap-in the mating components after assembly.

There is no general expression or definition of the maximum permissible level of misalignment. Apparently a die assembly is construed to be acceptable as long as the punches can enter the corresponding die cavity without physical contact. For reasonably good productivity, however, a ratio of diametrically-opposed, non-uniform clearance values should be established. It is suggested that the ratio of "Y" to "X" in the illustration be 2:1 maximum. To provide assurance that this ratio is not exceeded the minimum clearance allowance per side should equal 3 times the anticipated total eccentricity.

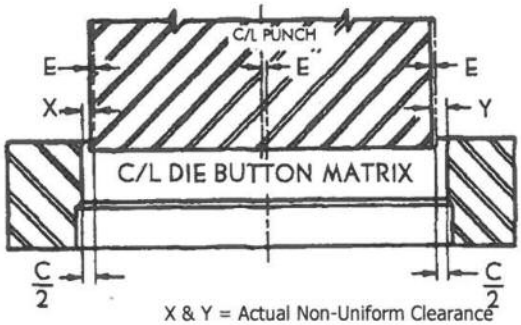

E =Normal Accumulation of Misalignment Increments Per Side

$\frac{C}{2}$ = Clearance Allowance Per Side

X & Y = Actual Non-Uniform Clearance Values Diametrically-Opposed

APPLICATION CONSIDERATIONS FOR PERFORATING COMPONENTS				
Clearance Considerations When More Than One Perforating Component Is Contained In Each Retainer Plate	Retention System			
	Press Fit			
	Basic Series		Variable Series	
	Round	Shaped	Round	Shaped
Misalignment Factor	Maximum Misalignment Increments Per Side			
Multi-Component Retainer C/1 to C/1 of Mating Holes	.0001	.0001	.0001	.0001
Effect of Permissible Shape Deviations	.0005	.0010	.0002	.0002
Retainer Hole C/1 to Punch Shank C/1	--0--	--0--	--0--	--0--
Punch Point C/1 to Punch Shank C/1	.00025	.0005	.00015	.00015
Retainer Hole C/1 to Die Body C/1	--0--	--0--	--0--	--0--
Die Hole C/1 to Die Body C/1	.00025	.0005	.00015	.00015
Max. Accumulation: Under Most Adverse Condition	.0011	.0021	.0006	.0006
Under Normal Conditions	.0006	.0010	.0003	.0003

THE BALL-LOCK SYSTEM OF COMPONENT RETENTION

The Ball-Lock retention system is a unique adaptation of the wedge principle. It assures positive locking, both vertically and radically, and permits rapid replacement of punches or die buttons from the working side of the die assembly.

Component installation is quick and simple–insert the punch or die button into the retainer hole and twist. The ball drops into the ball-seat to provide an immediate and positive lock.

To remove a component, it is only necessary to depress the ball by means of a release tool as shown. This action frees the punch or die but-ton so that it can be pulled out of the retainer.

BALL-LOCK ASSEMBLY

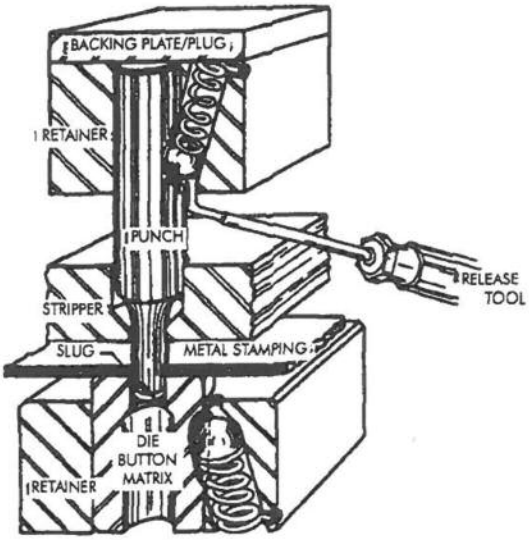

During the replacement procedure, it is unnecessary to disassemble the retainer set or to remove the die assembly from the press.

If a spring-loaded stripper plate is utilized, however, removal of "window" inserts or the plate itself may be necessary to clear the punch shanks.

The hardened backing plate distributes the punching load transmitted through the punch over a greater surface area. The reduced stress levels prevent "sinking" of the plate into the punch holder. By virtue of its hardened condition, the backing plate resists sinking of the punch despite the high stress values imposed by the end face of the punch. It is generally unnecessary, however, to utilize a backing plate beneath a die button.

THE WEDGE PRINCIPLE AND ITS REQUIREMENTS

An angular ball-seat is provided in the punch or die button as shown. It is imperative that the ball-seat provide a two-point contact with the hardened ball which is confined within the retainer body. A single point of contact is not acceptable because it does not provide the required radial control of the punch or die button when producing hole shapes other-than-round.

BALL TO BALL-SEAT RELATIONSHIP

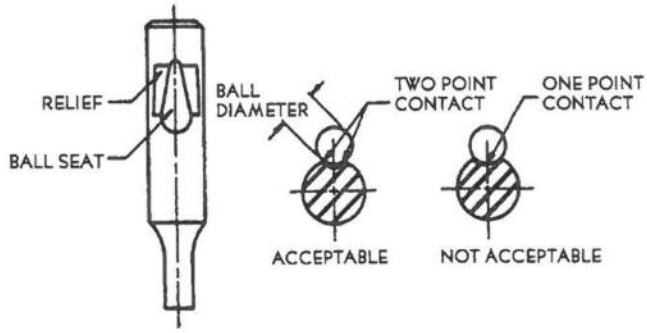

The locking area of the ball-seat must be relieved by means of a diametrical reduction on the punches only. Extremely high stresses are developed as a result of the two-point contact and the ball-seat edges may become somewhat flattened during the punching cycle. The relief provides an area into which these minor deformations can be displaced to eliminate the risk of interference during punch removal.

The retainer body contains a perpendicular hole which is a slip-fit with the punch shank or die button body. An angular ball-hole is provided adjacent to and intersecting with the component hole. It is very important to note that the ball-hole has a slightly greater angularity from the vertical than the ball- seat in the component. This angular difference helps to develop a dependable wedging action.

The salient forces and their directions of application are illustrated in the assembly drawing. Vector diagrams are indicated in the satellite sketches to further illustrate the actions and reactions.

A compression spring forces the hardened ball between the punch or die button and the retainer body. The spring load is applied to the ball at the angle established by the ball-hole. Resolution of the spring force into horizontal and vertical components indicates that the ball will move downward and to the left. The horizontal component forces the punch or die button against the retainer hole until all of the slip-fit clearance is adjacent to the ball.

Examination of the assembly will reveal that solid contact has been developed along section line AA. In effect, the ball is solidly wedged between the ball-hole and the ball-seat while the punch or die button is forced against the retainer hole.

Because the plane of contact is elevated from the horizontal, the vector components, indicate that the punch is also exposed to an upward force which tends to move it toward the backing plate. It is easily seen that any downward force, such as that imposed by stripping, applied to the punch can only serve to increase the wedging action. Conversely, any upward thrust of the component due to the application of the punching load will be opposed by the backing plate.

FUNCTIONAL GAGING ASSURES MULTI SOURCE INTERCHANGEABILITY

The safe locking range is established by the permissible minimum and maximum distances of the ball from the bottom of the retainer when the units are assembled. Utilization of dimensional limits relative to the ball-seat and the retention portion of the retainer body were once considered basic to the development of component standards. As the proposal activity progressed, it became apparent that a new basis for locking interchangeability was necessary.

For example, the angles and other physical dimensions are extremely difficult to measure. Secondly, the physical data for the ball-seat must be correlated with that of the retainer body to assure safe locking at assembly. Third, several combinations of dimensional limits are possible without affecting interchangeability. To specify the dimensions and tolerances used by any one manufacturer within the standard could well be disadvantageous to the others who used different combinations but still provided interchangeability.

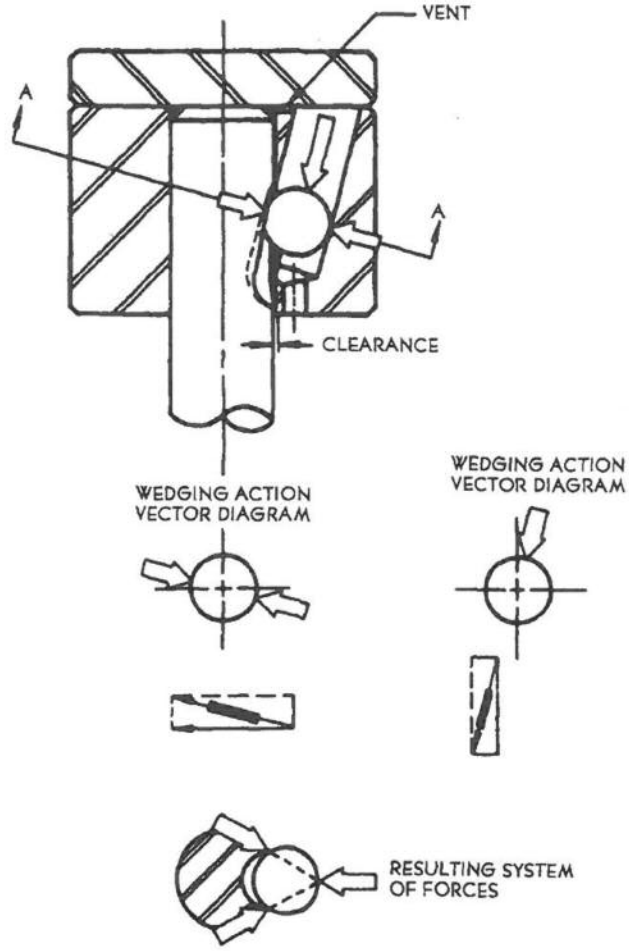

3-POINT CONTACT SPC.A-A

Ultimately, a system of functional gages was developed and is used by the member companies of the NAPMA. Typical examples of these gages and their application are illustrated, on page 12.

COMPONENT CLASSIFICATIONS, LIGHT DUTY AND HEAVY DUTY

Ball-lock product standards are classified into two groups: Light duty and Heavy Duty. Light Duty components are generally applicable for stock thicknesses up to 1/8" Heavy Duty items may be used for materials up to 3/8" thick. Because stamped parts are made from many materials having considerable hardness differences, the aforementioned thicknesses are indications only. Specific applications in critical areas should be discussed with a responsible punch manufacturer, die designer or builder before proceeding with the tooling.

The classifications are based on the diameter of the hardened ball used with a specific shank size. Die buttons, incidentally, are all classified as Light Duty. The charted data should prove helpful in understanding the classification system and also lists the related functional gages.

CHECK BALL SEAT

IF YOU HAVE DETERMINED THE BALL SEAT IS IN THE PROPER LOCATION, BUT YOU ENCOUNTER A PROBLEM WHEN IN PRODUCTION, THE PROBLEM IS WITH THE RETAINER.

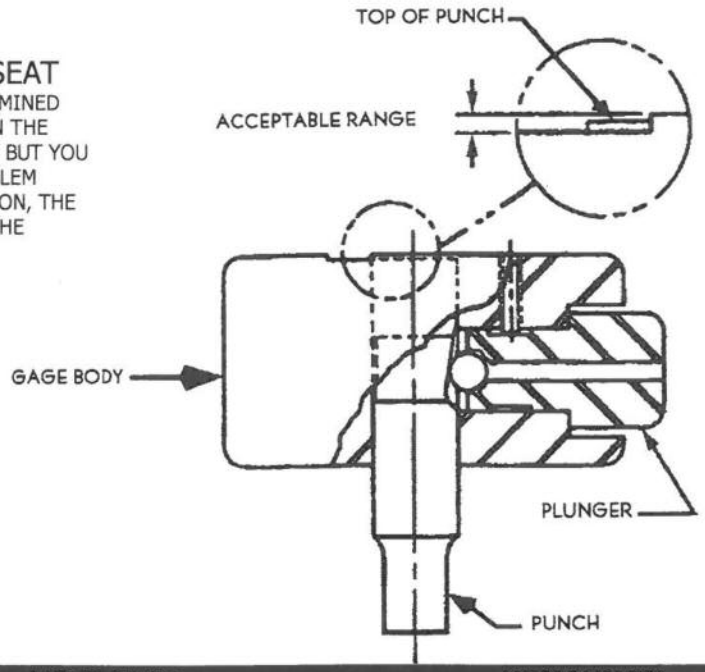

LIGHT DUTY			HEAVY DUTY		
Shank, Body or Retainer Hole D Nom Dia.	Ball Dia.	Punches Std. Gage No.	Shank, Body or Retainer Hole D Nom Dia.	Ball Dia.	Punches Std. Gage No.
1/4 (.250)	1/4	LGP-25	-	-	-
3/8 (.375)	1/4	LGP-37	3/8 (.375)	3/8	HGP-37
1/2 (.500)	5/16	LGP-50	1/2 (.500)	1/2	HGP-50
5/8 (.625)	5/16	LGP-62	5/8 (.625)	1/2	HGP-62
3/4 (.750)	3/8	LGP-75	3/4 (.750)	1/2	HGP-75
7/8 (.875)	3/8	LGP-87	7/8 (.875)	1/2	HGP-87
1 (1.000)	3/8	LGP-100	1 (1.000)	1/2	HGP-100
		-	1 1/4 (1.250)	1/2	HGP-125

THE PERFORATING PUNCH

Retained on the shank and usually unsupported at the point, the punch must be tough to withstand the impact loads, strong enough to cause slug separation in the workpiece and abrasion-resistant to oppose the stripping forces. Finally, it must provide sufficient length to permit a reasonable number of resharpenings. To achieve a satisfactory performance level, special attention must be directed to the punch proportions.

POINT LENGTH-TO-POINT SIZE PROPORTIONS

The most critical relationship is that of point length to point size. The punch point must be shaped and sized to satisfy the workpiece hole requirement. The length of point required is equal to the sum of the following listed elements:

(a.) Length of blend radius,
(b.) Sharpening allowance,
(c.) Length of stripper lip or straight portion in the support bushing,
(d.) Workpiece thickness,
(e.) Penetration into die cavity.

Excessive sharpening allowances increase the unsupported length and tend to result in breakage problems. To avoid this problem, it is recommended that the sharpening allowance be limited to approximately 1/4".

Standard overall lengths are generally in 1/4" increments to simplify replacement problems. The original length may be specified or the next-shorter length may be substituted when replacement is necessary. In either case, the full sharpening allowance is provided.

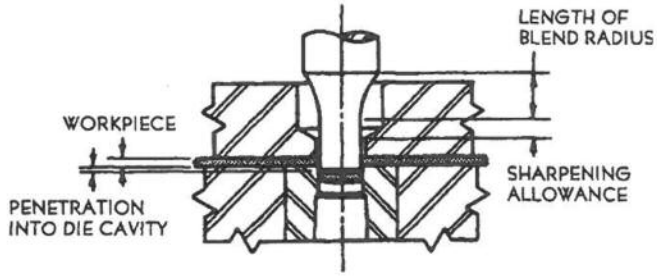

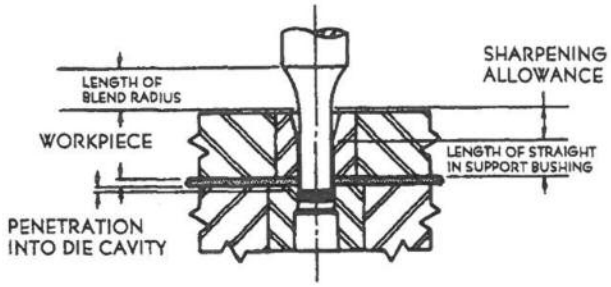

POINT-TO-SHANK PROPORTIONS

Various cross-sectional areas may be utilized throughout the punch length to reduce the applied stress levels and to improve component performance. Typical of these are the point, shank and head or backing plate. As the shank diameter increases relative to the punch point size, rigidity is improved and the punching load is better distributed.

Point-to-shank proportions can be selected from the standards to satisfy most application requirements. For example, a .125" point diameter is available on 3/16", 1/4", 5/16" and 3/8" shanks. For close-spaced requirements, the 3/16" shank diameter is usually indicated. Where punched hole diameters approach the thickness of the workpiece, the 3/8" diameter shank is recommended. The remaining two shank diameters are applicable to the more common hole sizes and spacing.

THE EJECTOR PUNCH AND ITS FUNCTION

These components incorporate a spring-loaded pin that extends from 1/32" to 1/16" beyond the face of the punch depending upon the point dimensions. At impact, the pin retracts until it is flush with the punch face. When the slug is separated from the workpiece, the pin exerts a force on the slug to drive it downward or to hold it in position depending upon the punch-to-die clearance allowance.

As the punch is withdrawn, the ejector pin functions like a spring-loaded stripper and prevents the slug from rising with the punch. When slug-ejector punches fail to control the slugs, the film strength of the lubricant must be examined. This is easily accomplished by applying a drop of lubricant between the thumb and index finger. If the film does not rupture as the digits are separated by an amount equal to the pin extension, the ejector system cannot function. A change of lubricant will resolve the problem and probably do a better job of preventing point- to-point contact between the punch and the workpiece.

It is important to note that in most cases, a slug-ejector punch is inter-changeable with its solid counterpart.

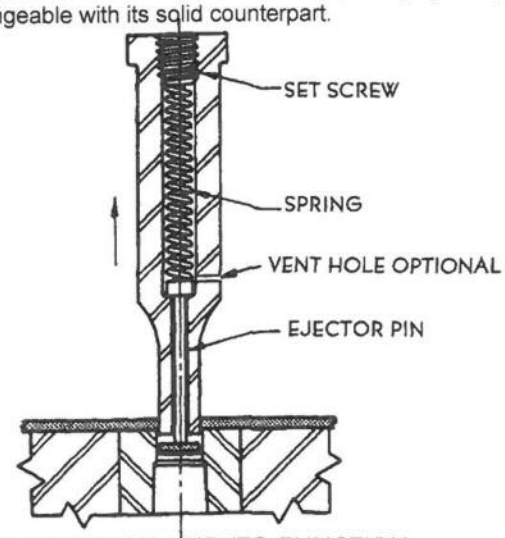

THE PILOT PUNCH AND ITS FUNCTION

A pilot punch must enter a previously punched-hole, contact the hole edge, move the workpiece to its required position and hold

in place before the other components strike the workpiece. The pilot punch is usually .001" smaller on the diameter than its related perforator and has approximately .090" of full diameter lead beyond the face of the perforators. The end of the pilot may range from bullet-nose to conical to permit entry, hole pickup and part movement. Because most die assemblies are designed with a .005" overfeed for pull- back, the pilot nose shape is not critical. The standards list nominal rather than overall lengths for pilot punches. The nominal length coincides with the overall length of the perforator and provides approximately 1/4" of additional length to permit adequate pilot action.

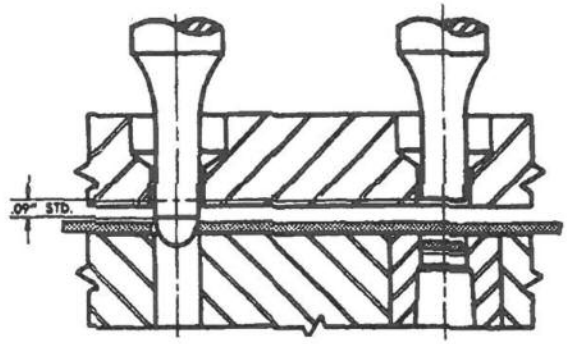

PART HOLE PICKUP

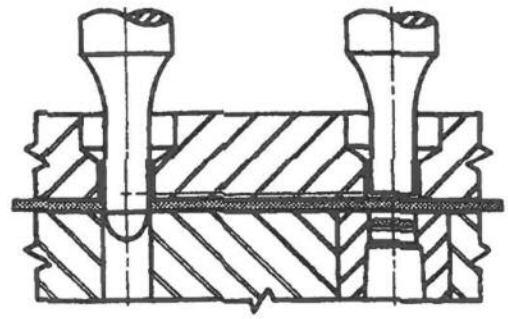

POSITIVE PART POSITIONING

DIE BUTTON/MATRIX REQUIREMENTS

The die button provides a hardened cutting edge to facilitate slug separation. The cavity or hole accepts the slug and must be long enough to permit a satisfactory number of sharpenings. The die hole shape conforms to that of the punch point and is somewhat larger to provide the necessary clearance.

Below the wear land, the die hole is enlarged to permit unrestricted slug travel. Individual preferences usually dilate the type of relief hole to be utilized.

For a given number of press strokes, punch wear is approximately three times that of the die button. To provide uniform life expectancy for these mating components and to reduce the risk of slug-jamming,, die lands should be limited to a 1/8' sharpening allowance. The overall lengths of standard die buttons are in 1/8' increments to provide the same replacement advantages that accrue to standard punches.

Die button relief holes are divided into two groups: "counter bored' and "taper relief." When the hole is larger at the intersection with the bottom of the wear land, the construction is referred to as stepped. The balance of the relief hole may be tapered or straight and may not conform with the shape of the die cavity. No-step construction requires that there be no step at the intersection with the wear land and that the relief hole be tapered to conform with the die cavity shape. Each provides the same sharpening allowance although there is less risk of surface collapse when using the no-step construction.

Die buttons having a stepped relief are mass- produced, stocked in a hardened condition and finished to order. Tapered Relief die buttons must be made to order because any alteration of the die hole will extend the wear land and result in slug-jamming problems, especially when using locating devices or holding devices.

Both types of construction are available in headless or headed types. The headless die button must be press- fitted for retention. Headed die buttons may be slip-fitted to avoid distortion of the retainer plate when large numbers must be inserted. The larger bearing surface provided by the head also results in better load distribution.

STEPPED-RELIEF
DIE BUTTONS/MATRIX

NO-STEP
DIE BUTTONS/MATRIX

PUNCH GUIDE BUSHINGS

COMPONENT ALIGNMENT CONDITIONS

STATIC VS DYNAMIC

Punch-to-die alignment is established under no-load or static conditions. Its accuracy is determined by the selected precision level of the components and the quality of workmanship displayed during the construction phases. Stamping die assemblies, however, do not perform under static conditions

In operation, the punches are subjected to dynamic loading conditions which tend to adversely affect the established alignment. The performance capability of a die assembly is largely determined by how well the perforators resist the deflection and deformation forces to maintain the initial alignment accuracy. The ability of a punch to resist these destructive forces is based on its physical proportions, material strength and method of retention.

Occasionally, the application requirements restrict a designer's ability to adequately develop the structural strength of a particular punch. This is especially true when the punch is unusually long and slender or the point size-to-stock thickness ratio is less than 1.5 to 1. In these cases, the designer should support the punch point externally by utilizing a Punch Guide Bushing.

APPLICATION AND FUNCTION

Punch Guide Bushings are usually press-fitted in the stripper plate. The bushing hole conforms to the punch point shape and is slightly larger. The clearance, usually .0005" total, permits the punch to move vertically with-out interference. By utilizing the mass of the stripper plate, lateral deflection of the punch point is restricted to the clearance allowance provided in the bushing. Because the punch is retained at one end and supported at the other, its rigidity is also increased substantially.

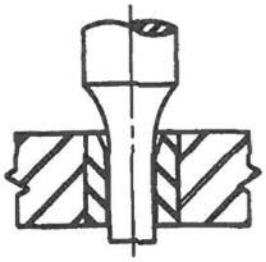

PUNCH GUIDE BUSHING

To prevent lateral movement of a spring-loaded stripper plate as deflecting forces develop, it must be guided by at least two pairs of pins and bushings. The pins are generally secured in the stripper plate and the mating bushings are press-fitted in the punch retainer plate or upper die set member.

Fixed strippers require longer punch points because of the clearance provided between the top of the stock and the stripper channel. The added point length and the inability to support it at the impact position can lead to premature failure.

BUSHING CONSTRUCTION AND HOLE SIZE RANGES

The retention portion of a punch guide bushing is cylindrical to fit a round hole in the stripper. The bushing hole consists of a straight section with a flared upper end to facilitate punch entry. The flare can be conical in form or matched to the blend radius of the punch at the option of the manufacturer.

The straight portion of the hole supports the punch point when deflection occurs. For round pointed punches, the minimum straight length is usually equal to the point diameter. The actual dimension depends upon the selected proportions of body diameter to overall length. Generally, the straight portion increases as the bushing gets longer or the body diameter gets smaller.

For shaped hole bushings, the large diameter of the flare is approximately .03" smaller than the body size. The straight portion length, therefore, is dependent upon the body diameter and overall length selected as well as the shape dimensions. The pattern of the hole length is similar to that of bushings with round holes.

Round hole bushings are available from .031" to .425" in diameter in eight body sizes ranging from 1/8" through 5/8" diameter.

Shaped holes with maximum shape diagonals of .170" to .425" are included in the six body sizes from 1/4" through 5/8" diameter. Overall body lengths are 3/8", 1 /2" and 5/8" for all types and hole shapes but not in all body diameters.

BUSHING STYLES AND TYPES

Punch Guide Bushings are available in two styles: one piece for round holes and wire EDM shapes and two- piece, split-halves in which the desired hole shape is ground.

In each style there are three types: Headless, Head- down and Head-up. Headless bushings may be pressed-in from either end and are the most popular

Head-down bushings are usually selected to satisfy severe stripping conditions because they cannot be pulled out of the stripper plate. The flare is provided at the end opposite the head.

Head-up bushings are generally used for slip-fit applications to prevent stripper plate distortion. It is usually necessary to provide mechanical restraints at the head end to oppose stripping forces. Some users prefer this type, even in press-fit applications, because the head prevents the bushing from falling into the die area. The head end is flared in this type.

Whenever shaped-hole bushings are required, keying flats are recommended to establish and maintain proper orientation of mating components. To prevent accidents, the keys should be fastened to the stripper plate.